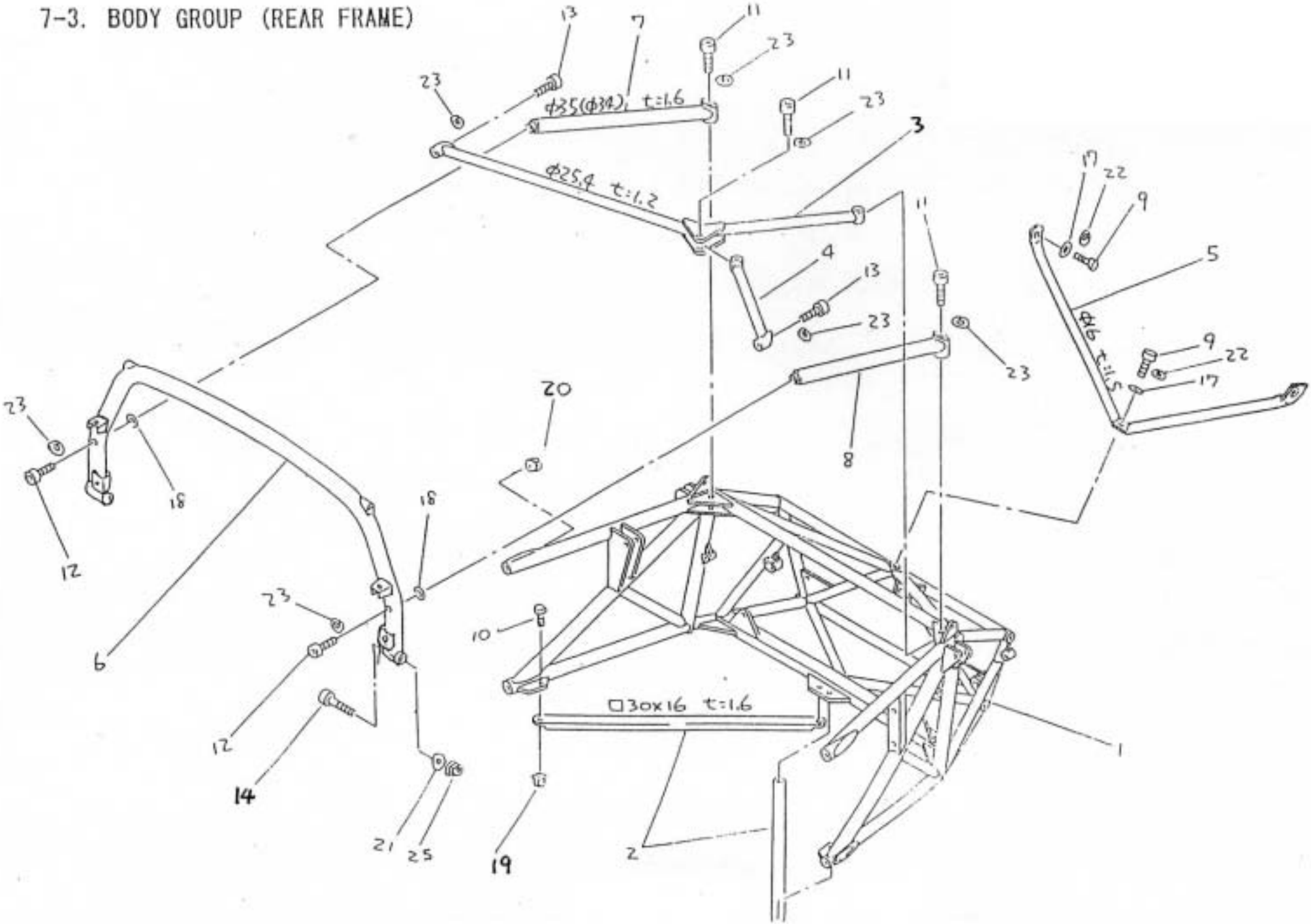7-3. BODY GROUP (REAR FRAME)