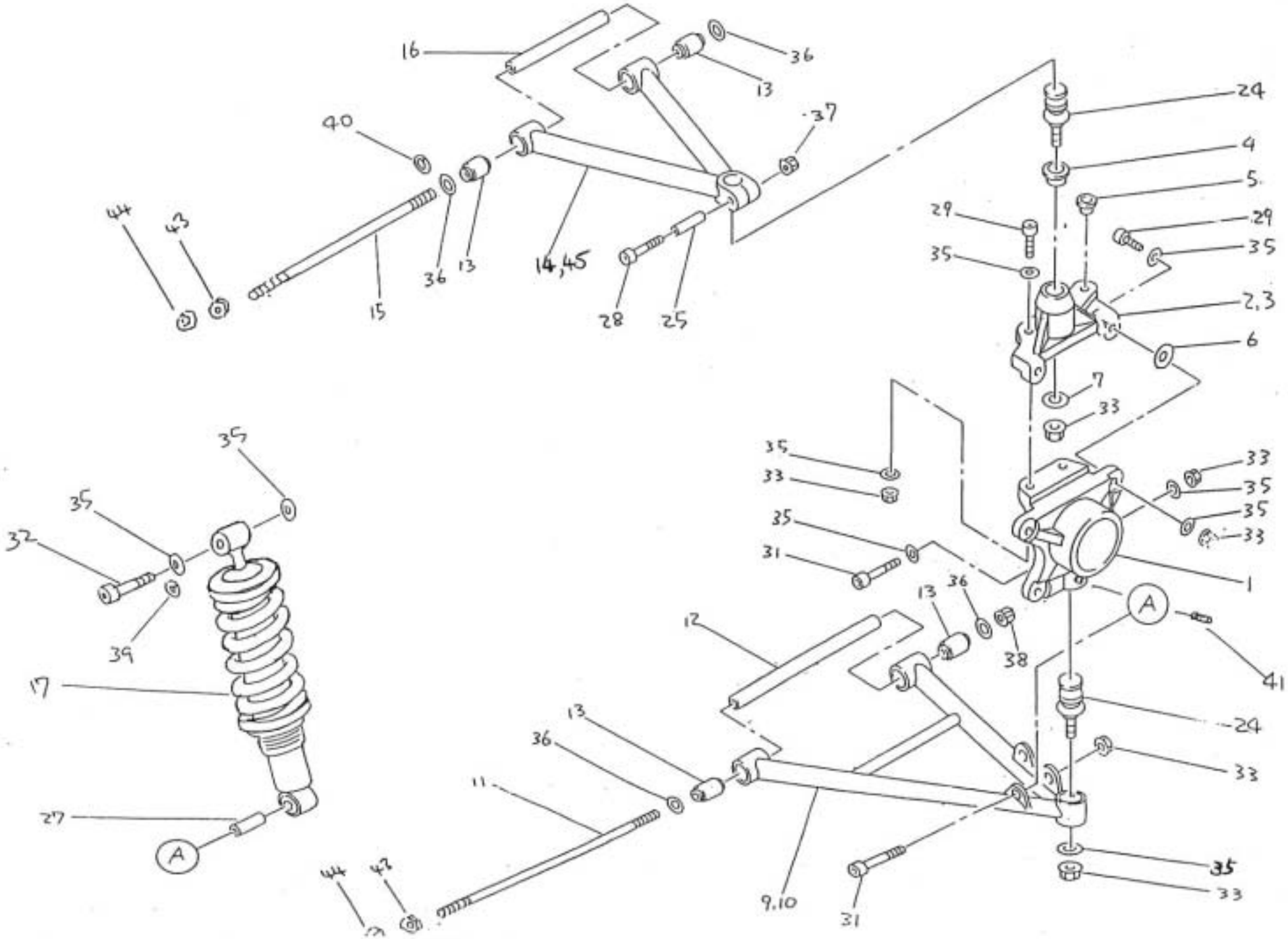4-5. POWER TRAIN, CHASSIS GROUP (FRONT SUSPENSION).